MALE END VIEW	FEMALE END VIEW	WIRING DIAGRAM
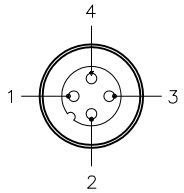	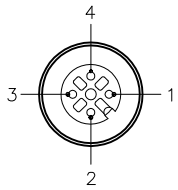	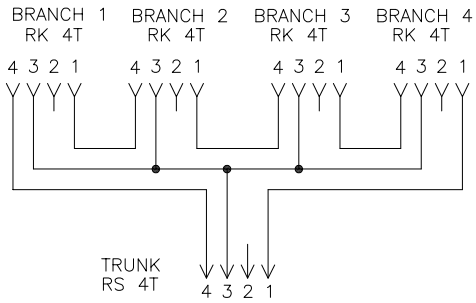

SPECIFICATIONS	
CONTACT CARRIER MATERIAL	NYLON OR TPU
MOLDED HEAD MATERIAL/COLOR	TPU/YELLOW
CONTACT MATERIAL/PLATING	BRASS/GOLD
COUPLING NUT MATERIAL/PLATING	BRASS/NICKEL
RATED CURRENT [A]	2.0 A
RATED VOLTAGE [V]	60 VAC/75 VDC
OUTER JACKET MATERIAL/COLOR	PVC/YELLOW
CONDUCTOR INSULATION MATERIAL	PVC
NUMBER OF CONDUCTOR [AWG]	3x24 AWG
TEMPERATURE RATING	−40°C to +80°C (−40°F to +176°F)
PROTECTION CLASS	MEETS NEMA 1,3,4,6P AND IEC IP68

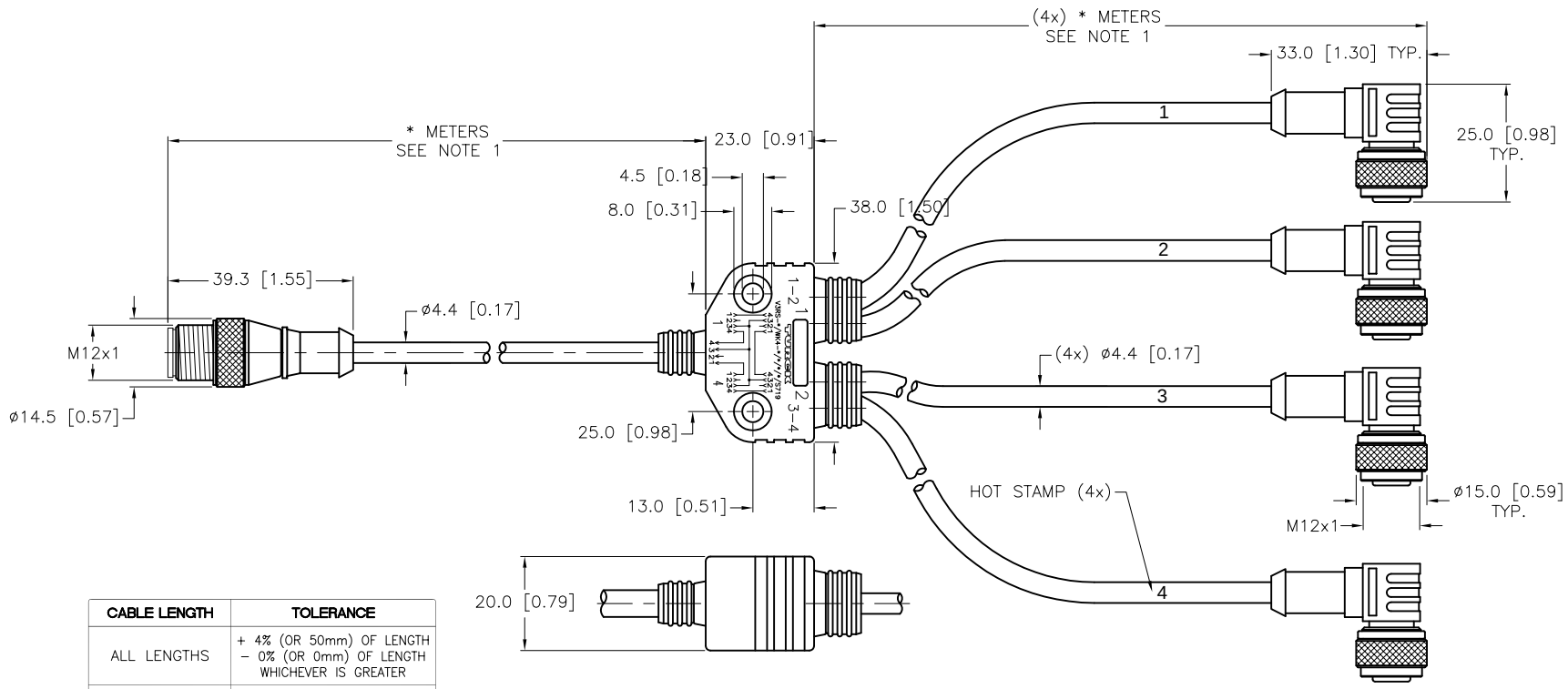

CABLE LENGTH	TOLERANCE
ALL LENGTHS	+ 4% (OR 50mm) OF LENGTH − 0% (OR 0mm) OF LENGTH WHICHEVER IS GREATER
STRIP LENGTH	**TOLERANCE**
0−7mm	±0.5mm
8−29mm	±1.0mm
30−49mm	±2.0mm
50−69mm	±3.0mm
70−100mm	±4.0mm
OVER 100mm	±5.0mm

SOURCE DRAWING - FOR REFERENCE ONLY

NOTES:

1. "*" INDICATES CABLE LENGTH IN METERS. CONTACT TURCK TO ORDER SPECIFIC LENGTHS.

2. "/S719" DESIGNATES SERIES WIRING.

3. LENGTHS 10 METERS AND GREATER WILL BE ROUNDED TO THE NEAREST WHOLE METER.

REV	DESCRIPTION	BY	DATE	ECO NO.
A	DRAWING RELEASE	KMY	06/14/12	

RELATED DOCUMENTS
1.
2.
3.
4.

3RD ANGLE PROJECTION

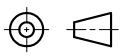

THIS DRAWING IS CONFIDENTIAL AND THE PROPERTY OF TURCK INC. USE OF THIS DOCUMENT WITHOUT WRITTEN PERMISSION IS PROHIBITED.

TURCK INC
High Technology Sensors and Automation Controls
3000 CAMPUS DRIVE
MINNEAPOLIS, MN 55441
1−800−544−7769
(763) 553−7300
(763) 553−0708 fax
turck.com

MATERIAL
SEE SPECIFICATIONS

FINISH
SEE SPECIFICATIONS

ALL DIMENSIONS DISPLAYED ON THIS DRAWING ARE FOR REFERENCE ONLY

CONTACT TURCK FOR MORE INFORMATION

DRFT	KMY	DATE	05/31/12
APVD	T.S.	SCALE	1=1.5

UNIT OF MEASUREMENT
MILLIMETER [INCH]
DO NOT SCALE THIS DRAWING

DESCRIPTION
V3RS−*/WK4−*/*/*/*/S719

IDENTIFICATION NO.

REV
A

FILE: 777029214

SHEET 1 OF 1

Approved 06/01/2012, work order #29448 by T.S.